SMD80HX/R/RX

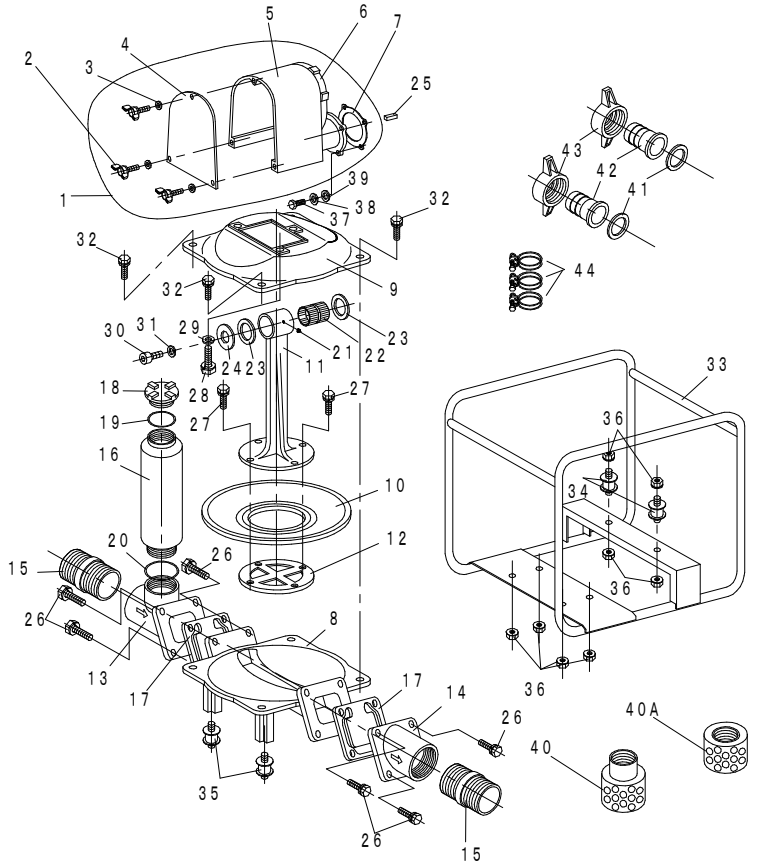

REF No.	Parts No.	Parts name	Q'ty	Price	Remarks
	ENGINE	HONDA GX160	1		
		ROBIN EY20	(1)		
		ROBIN EX17			
1	202 200 070	GEAR ASSY	1		2～7+GEAR
2	203 000 640	WING BOLT	3		M5×10
3	203 100 100	SPRING WASHER	3		M5
4	200 300 540	COVER	1		
5	200 200 921	GEAR CASE	1		
6	200 200 911	COVER, INPUT	1		
7	200 900 590	SHEET PACKING	1		THREE SHEET
8	200 200 370	CASING	1		SMD-80
9	200 200 380	CASING COVER	1		SMD-80
10	200 900 470	DIAPHRAGM	1		SMD-80
11	200 200 480	ROD	1		SMD-80
12	200 200 490	CAP-DIAPHRAGM	1		SMD-80
13	200 200 470	SUCTION FLANGE	1		IN-NPSM3
14	200 200 460	BEND	1		IN-NPSM3
15	200 300 420	FITTING-PIPE	2		3B NPT-PF
	200 300 421	FITTING-PIPE	(2)		3B NPT- PT
16	200 200 970	CHAMBER	1		SMD-80
17	200 900 160	CHECK VALVE	2		
18	200 200 700	PLUG	1		AL
19	200 800 220	O-RING	1		W1516-31
20	200 800 210	O-RING	1		P-80
21	203 300 080	GREASE NIPPLE	1		C-2 PT1/8
22	203 300 140	NEEDLE BEARING	1		29#30R
23	200 500 120	COLLAR	2		
24	203 100 170	PLAIN WASHER	1		9-48-4.5

SMD80HX/R/RX

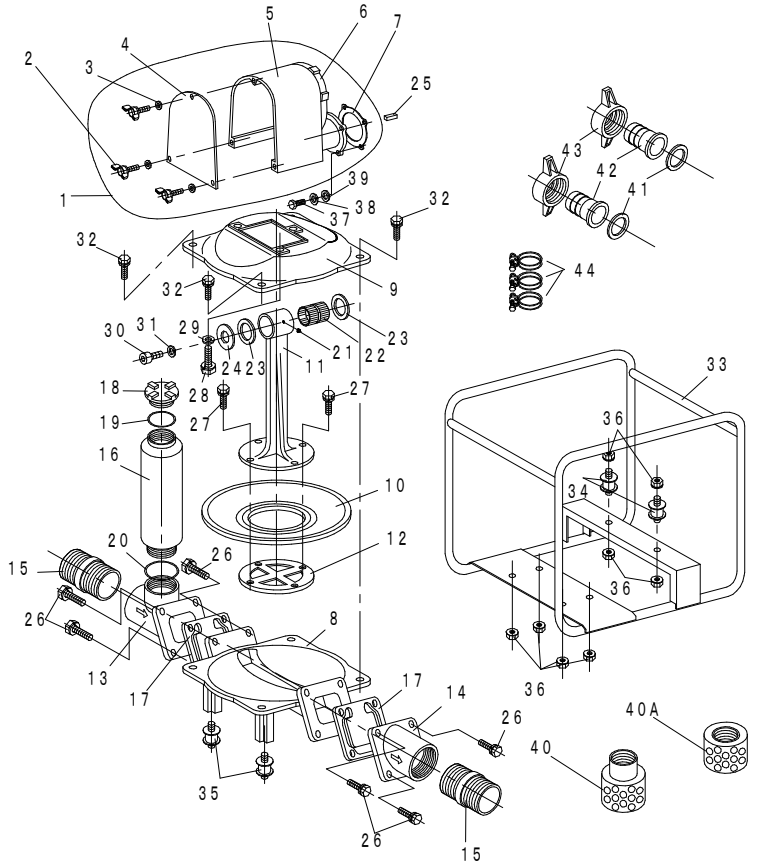

REF No.	Parts No.	Parts name	Q'ty	Price	Remarks
25	203 300 090	KEY	1		4.76×30
26	203 000 040	HEX.BOLT	8		M8x25 P=2
27	203 000 060	HEX.BOLT	4		M8x30 P=3
28	203 000 080	HEX.BOLT	3		M10x30 P=2
29	203 100 140	PLAIN WASHER	3		M10
30	203 000 390	HEX. SOCKET BOLT	1		M8×15 SUS
31	203 100 120	SPRING WASHER	1		M8
32	203 000 130	HEX.BOLT	1		M10x40 P=2
33	200 100 060	FRAME(BLACK)	1		GX,EX ENGINE
	200 100 061	FRAME(WHITE)	(1)		GX,EX ENGINE
	200 100 062	FRAME(YELLOW)	(1)		GX,EX ENGINE
	200 100 100	FRAME(BLACK)	(1)		EY ENGINE
	200 100 112	FRAME(WHITE)	(1)		EY ENGINE
	200 100 111	FRAME(YELLOW)	(1)		EY ENGINE
34	200 900 390	ANTI-VIBRATION RUBBER	2		
35	200 900 400	ANTI-VIBRATION RUBBER	4		
36	203 200 030	SPRING NUT	8		M8
37	203 000 320	HEX.BOLT	4		UNF5/16×25
38	203 100 120	SPRING WASHER	4		M8
39	203 100 150	PLAIN WASHER	4		M8
40	201 200 190	STRAINER	1		3"ER
40A	201 200 200	STRAINER	(1)		3″DR
41	200 900 060	PACKING, COUPLING	2		NBR
42	200 200 680	HOSE COUPLING	(2)		AL
43	200 200 250	HOSE COUPLING HANDLE	2		PF3
	200 200 710	HOSE COUPLING HANDLE	(2)		NPSH3
44	201 000 060	HOSE BAND	3		3"